bathlife

Thermostatic roof shower mixer

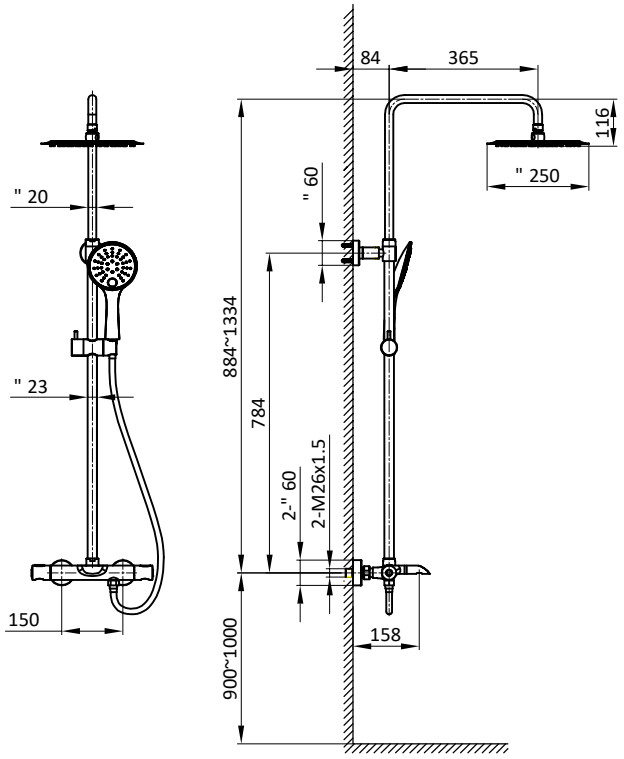

Installation drawing

Installation Instruction

1. Supply lines should be purged to clean impurities before connecting the unit (hot water on left, cold water on right).
2. Screw the S-Connectors into supply lines. The S-Connectors can be adjusted in 150 20mm, from hot water supply to cold water supply so that the mixer can be adjusted during installation.
3. Put decorative covers on the S-Connectors closely to the wall.
4. Put the washers into the nuts of the mixer, and then screw the nuts to tighten the mixer onto the S-Connectors. The mixer should be aligned with the wall and floor horizontally. The hot water supply should be connected to the left and the cold water supply to the right.
5. Put the washer into the nut of the shower pipe . insert the shower pipe onto the mixer, and then tighten it closely .
6. Mark a suitable position on wall and drill two nail holes, then put the nuts into the nail holes till it is the same level with the wall. Install the fix stand on it and cover with decorative cup. Check if it is fixed well.
7. Fix the bracket onto the shower pipe on a suitable position. Put washers into the hose connections, one piece of each, and then tighten the hose to the water outlet and the handle shower. Last install the shower head onto the shower pipe . Please make sure all washers and o rings are well installed.
8. Leakage test: turn on/off the temperature control handle and multifunctional handle. If no leakage is found, the installation is done.

Application

1. Turn on the multifunctional handle; water will come out from top shower or handle shower.
2. The security stop is 38！ . Press the security stop and turn the handle fore and back, water temperature will become hotter or colder.

Cleaning and maintenance

1. Use soap and water to remove lime stains from chrome surface. Don't use acidic detergents, scouring pads or steel wool; otherwise the chrome parts will be damaged
2. Use soap and water to clean installation accessories, such as plastic or rubber components. Don't use acidic detergents, scouring pads, alcohol cleaners or steel wool.

Data Sheet

Nominal Diameter	M26x1.5
General Medium	Water
Water Pressure	0.05Mpa-1.0Mpa
Recommended Pressure	0.1Mpa-0.6Mpa
Temperature Range	4!C - 90!C

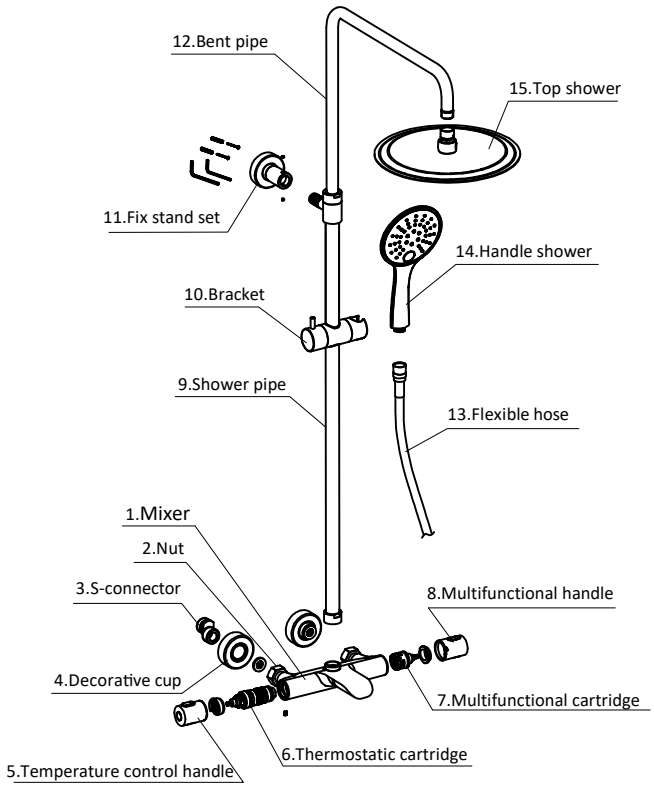

Product accessories

808013-599
20180615