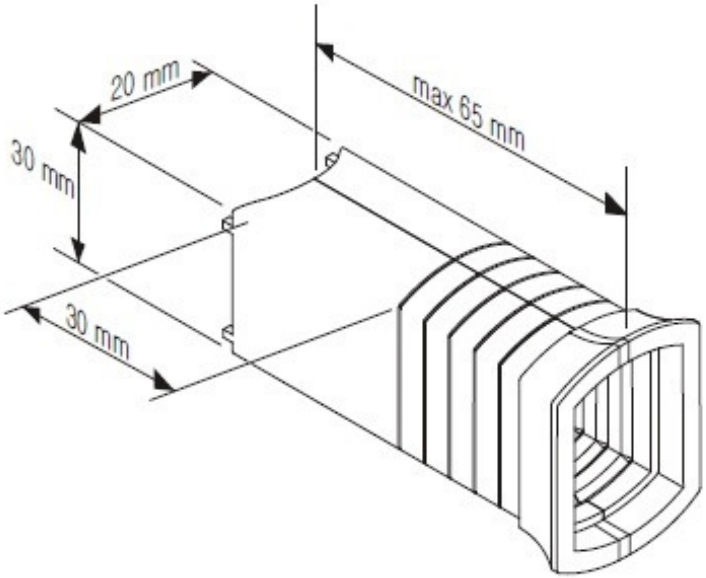
20 mm
max 65 mm
30 mm
30 mm

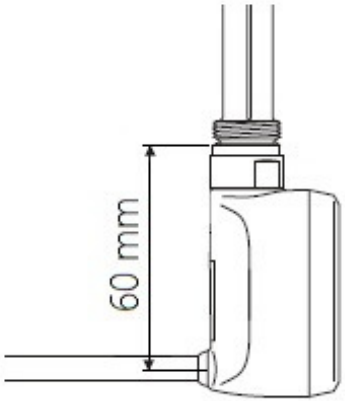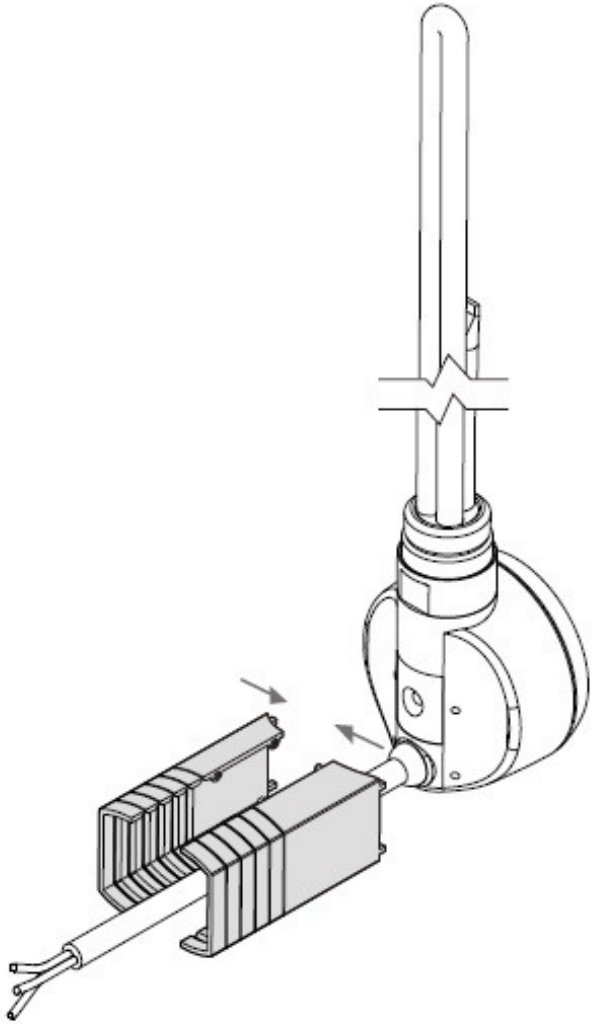
60 mm