1.

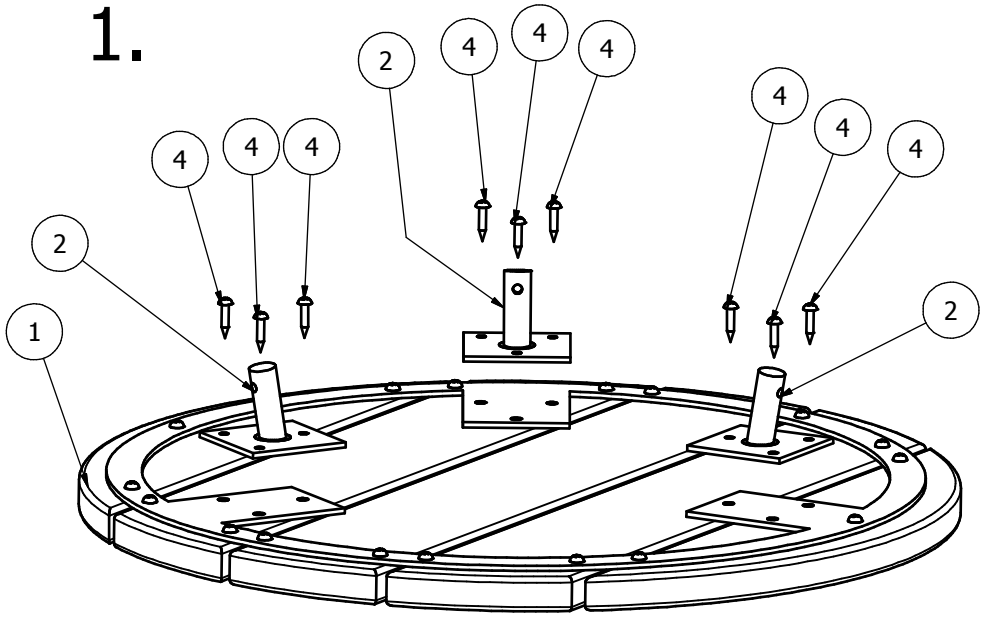

2.

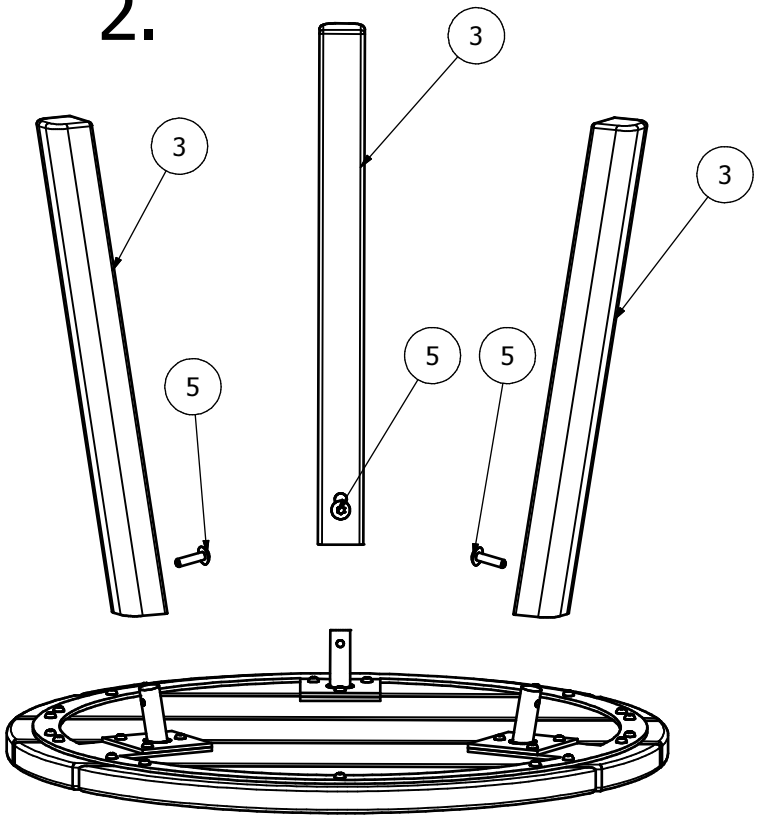

3.

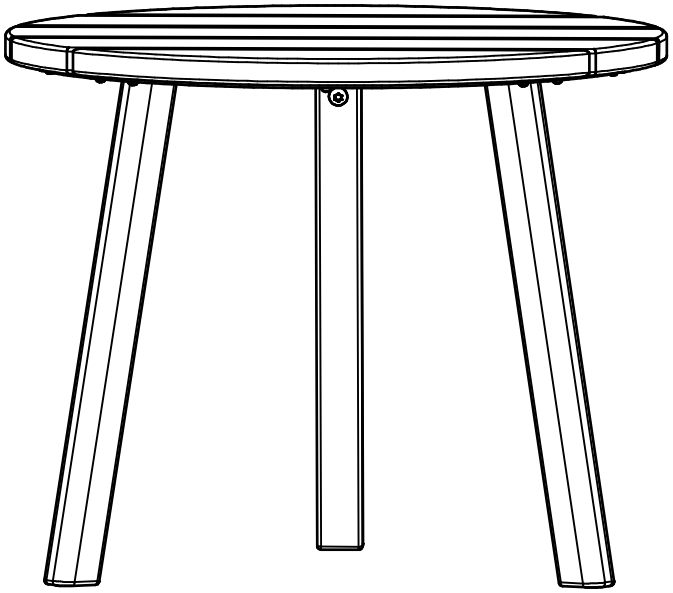

Tennessee Table

HILLERSTORP

PARTS LIST			
ITEM	QTY	PART NUMBER	DESCRIPTION
1	1	Tennessee Table top	
2	3	Tennessee Table leg mount	
3	3	Tennessee Table leg	
4	9	TS420	Wood screw 4x20
5	3	632FZB	Furniture bolt K6S M6/16

Date: 2017-11-22